Flat strike plate - - - - - - - 09640- 01

130 x 24 x 3 mm, ground and galvanised, DIN uni

effeff ASSA ABLOY

Product description

Short flat striking plate with latch bolt aperture.

Overview of Advantages

- DIN left and right usable
- For conventional effeff standard electric strike models, except for ProFix® variants

Technical data

Dimensions	Width: 24 mm , Length: 130 mm
For security application	Yes
Material	Steel
Opening direction according to DIN	left/right
Latch bolt guide integrated	No
Forend shape	square
Strike plate shape	flat
Dead bolt cutout	No
Pre-equipped for bolt switch contact	No
Adjustable	No
Thickness	3 mm
Base colour	polished, galvanised
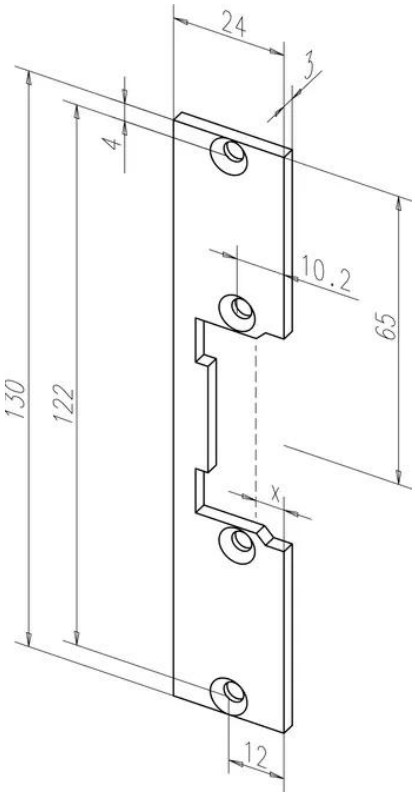
Article number	-------09640-01
EAN	4042203145450